Resolving Vectors

1. **What are Superman's x and y components?**

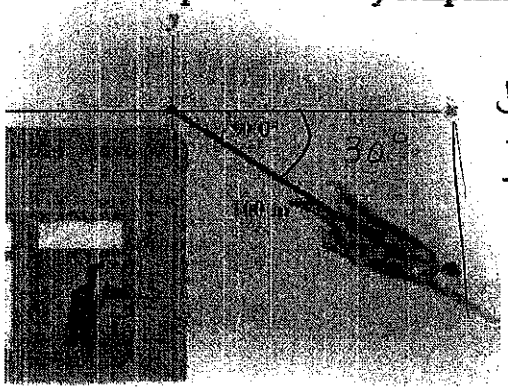

this angle lies in Q4.
It shows negative rotation.
Use $-30°$ or $330°$ for calculation.

$\langle 100 \cos -30°, 100 \sin -30° \rangle$
$\langle 86.6, -50 \rangle$

2. What are the x and y components of the plane's velocity?

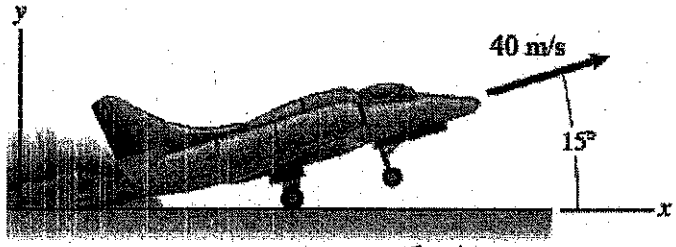

$\langle 40 \cos 15°, 40 \sin 15° \rangle$
$\langle 38.6, 10.4 \rangle$

direction

3. How fast and at what angle is the plane traveling?

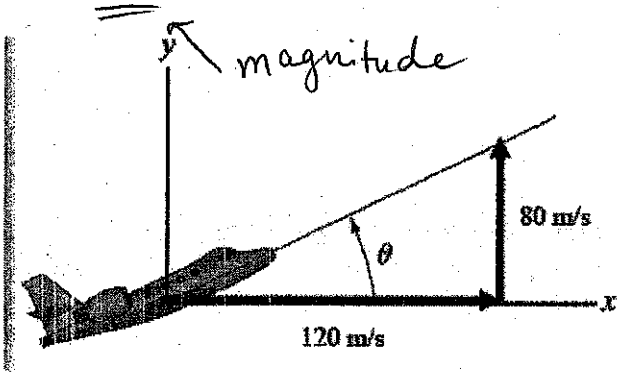

Speed = magnitude
$\sqrt{120^2 + 80^2} \approx 144.2$ m/s

angle = direction
$\tan^{-1}\left(\frac{80}{120}\right) \approx 33.7°$

4. What is the resultant vector for the following forces? (The table may help)

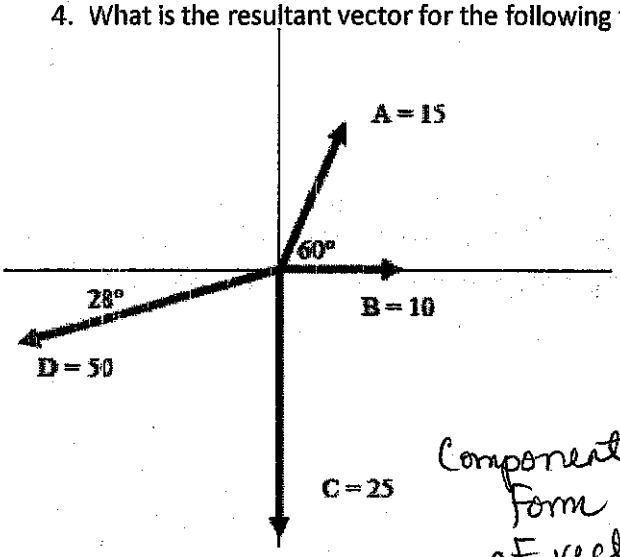

magnitude: $\sqrt{26.6^2 + 35.5^2} \approx \boxed{44.4}$
direction: $\tan^{-1}(-35.5/-26.6) \approx 53.2° + 180°$

233.2°

	X	Y
A	15 cos 60°	15 sin 60°
B	10 cos 0°	10 sin 0°
C	25 cos 270°	25 sin 270°
D	50 cos 208°	50 sin 208°

Component form of vectors

A $\langle 7.5, 13.0 \rangle$
B $\langle 10, 0 \rangle$
C $\langle 0, -25 \rangle$
D $\langle -44.1, -23.5 \rangle$

Sum of vectors
$\langle -26.6, -35.5 \rangle$

Check the signs of the coordinates to determine the quadrant. The vector lies

the sum of the vectors

5. Determine the resultant of the following

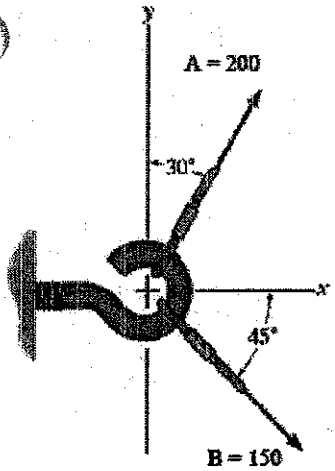

$A = \langle 200\cos 60°, 200\sin 60° \rangle$

$\langle 100, 173.2 \rangle$

$B = \langle 150\cos(-45°), 150\sin(-45°) \rangle$

$\langle 106.1, -106.1 \rangle$

Resultant vector: $\langle 206.1, 67.1 \rangle$

6. Determine the resultant of the following

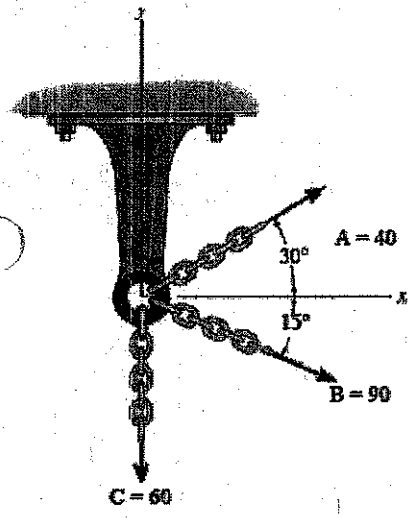

$A = \langle 40\cos 30°, 40\sin 30° \rangle$

$\langle 34.6, 20 \rangle$

$B = \langle 90\ \cancel{\sin}\ \cos(-15°), 90\sin(-15°) \rangle$

$\langle 86.9, -23.3 \rangle$

7. How far east has a person walked if he travels 350 m in a direction of 25° E of N? We want to know the horizontal component of the vector

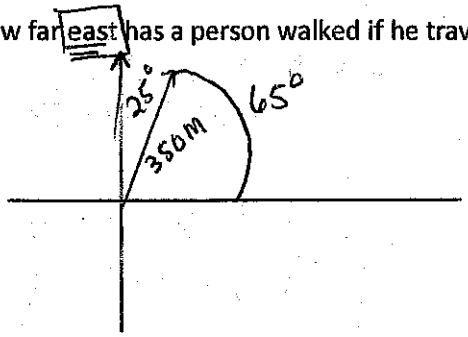

$\langle 350\cos 65°, 350\sin 65° \rangle$

$\langle 147.9, 317.2 \rangle$

the person has walked 147.9 m to the east

8. What would be the resulting displacement and direction if a snail crawls 2.0 m north then 3.0 m east?

magnitude ↑ angle ↑ 90°

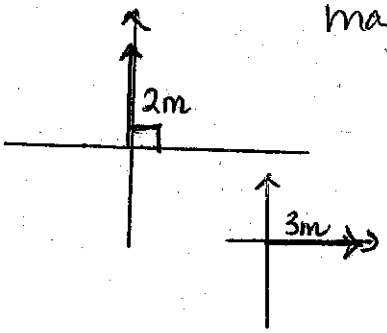

$V_1 \langle 2\cos 90°, 2\sin 90° \rangle$

$\langle 0, 2 \rangle$

$V_2 \langle 3\cos 0°, 3\sin 0° \rangle$

$\langle 3, 0 \rangle$

Resultant vector

$\langle 3, 2 \rangle$

$\sqrt{3^2+2^2} \approx 3.6$

$\tan^{-1}(2/3) \approx 33.7°$

9. A seagull flying with an airspeed of 10 km/hr is flying north but suddenly encounters a wind of 5 km/h at 340°. What will be the new direction and airspeed of the seagull?

Seagull

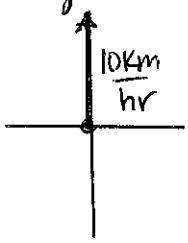

$\langle 10\cos 90°, 10\sin 90° \rangle$

$\langle 0, 10 \rangle$

WIND

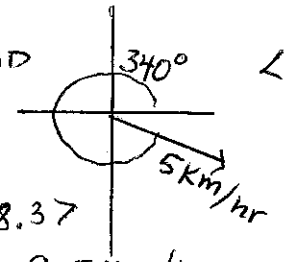

$\langle 5\cos 340°, 5\sin 340° \rangle$

$\langle 4.7, -1.7 \rangle$

Resultant: $\langle 4.7, 8.3 \rangle$

airspeed: $\sqrt{4.7^2 + 8.3^2} \approx 9.5$ km/hr

direction: $\tan^{-1}(8.3/4.7) \approx 60.5°$

10. A boat crosses a river at 10.5 knots at a bearing of 23° of N of E. If the current in the river is 3.7 knots at 8° E of S. What is the new speed and bearing?

Boat

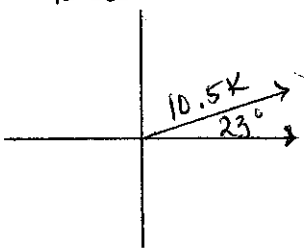

$\langle 10.5\cos 23°, 10.5\sin 23° \rangle$

$\langle 9.7, 4.1 \rangle$

Current

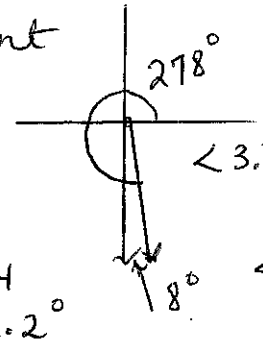

$\langle 3.7\cos 278°, 3.7\sin 278° \rangle$

$\langle 0.5, -3.7 \rangle$

Resultant: $\langle 10.2, 0.4 \rangle$

Speed: $\sqrt{10.2^2 + 0.4^2} \approx 110.4$

direction: $\tan^{-1}(0.4/10.2) \approx 2.2°$

11. Two boys push on a box. One pushes with a force of 125 N to the east. The other exerts a force of 165 N to the north. What is the size and direction of the resultant force on the box?

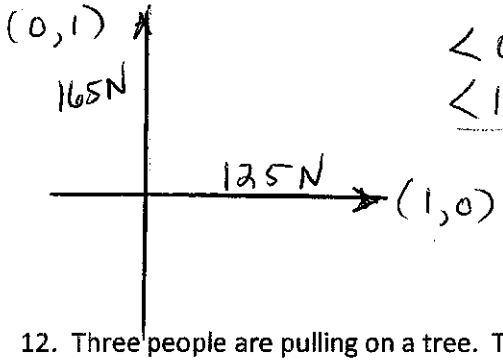

$\langle 0, 165 \rangle$

$\langle 125, 0 \rangle$

$\langle 125, 165 \rangle$

Force: $\sqrt{125^2 + 165^2} \approx \boxed{207.0\text{N}}$

direction $\approx \tan^{-1}\left(\frac{165}{125}\right) \approx \boxed{52.9°}$

12. Three people are pulling on a tree. The first person pulls with 15 N at 65°, the second with 16 N at 135° and third with 11 N at 195°. What is the magnitude and direction of the resultant force on the tree?

P_1 $\langle 15\cos 65°, 15\sin 65° \rangle$

$\langle 6.3, 13.6 \rangle$

P_2 $\langle 16\cos 135°, 16\sin 135° \rangle$

$\langle -11.3, 11.3 \rangle$

P_3 $\langle 11\cos 195°, 11\sin 195° \rangle$

$\langle -10.6, -2.8 \rangle$

Resultant Vector $P_1 + P_2 + P_3$ $\langle -15.6, 22.1 \rangle$ Q2

magnitude of resultant vector

$\sqrt{15.6^2 + 22.1^2}$

$\boxed{\approx 27.1\text{ N}}$

direction:

$\tan^{-1}\left(\frac{22.1}{-15.6}\right) + 180°$

$\boxed{\approx 125.2°}$