Resolving vectors review.

Identify the component vector. Sketch it in the graph provided.

1.

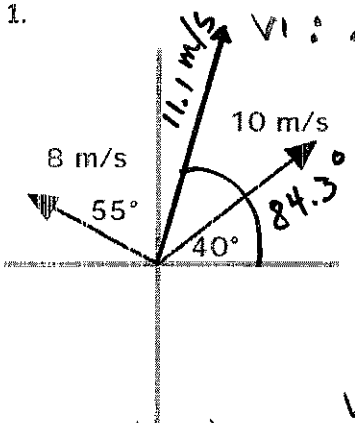

$V_1 : \langle 8\cos 145°, 8\sin 145° \rangle$

$\langle -6.6, 4.6 \rangle$

$V_2 : \langle 10\cos 40°, 10\sin 40° \rangle$

$\langle 7.7, 6.4 \rangle$

$V_1 + V_2 = \langle 1.1, 11.0 \rangle$

$\tan^{-1}\left(\frac{11.0}{1.1}\right) \approx 84.3°$

$\sqrt{1.1^2 + 11.0^2}$

mag ≈ 11.1

2.

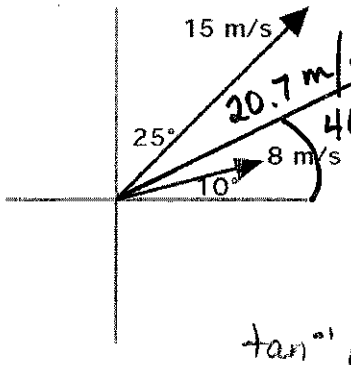

$V_1 = \langle 8\cos 10°, 8\sin 10° \rangle$

$\langle 7.9, 1.4 \rangle$

$V_2 = \langle 15\cos 65°, 15\sin 65° \rangle$

$\langle 6.3, 13.6 \rangle$

$V_1 + V_2 = \langle 14.2, 15 \rangle$

$\tan^{-1}\left(\frac{15}{14.2}\right) \approx 46.6°$

mag $= \sqrt{14.2^2 + 15^2} \approx 20.7$ m/s

3.

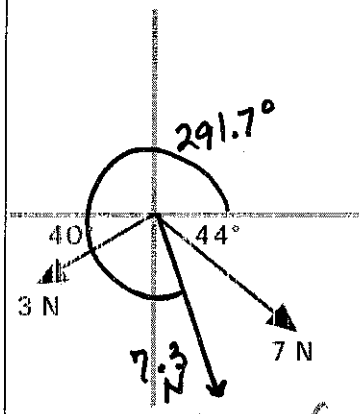

$V_1 = \langle 3\cos 220°, 3\sin 220° \rangle$

$\langle -2.3, -1.9 \rangle$

$V_2 = \langle 7\cos 316°, 7\sin 316° \rangle$

$\langle 5.0, -4.9 \rangle$

$V_1 + V_2 =$

$\langle 2.7, -6.8 \rangle$

$\sqrt{2.7^2 + 6.8^2} \approx 7.3$

$\tan^{-1}\left(\frac{-6.8}{2.7}\right) + 360° \approx 291.7°$

4.

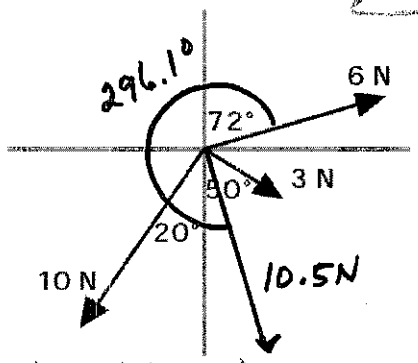

$V_1 = \langle 6\cos 18°, 6\sin 18° \rangle$

$\langle 5.7, 1.9 \rangle$

$V_2 = \langle 10\cos 250°, 10\sin 250° \rangle$

$\langle -3.4, -9.4 \rangle$

$V_3 = \langle 3\cos 320°, 3\sin 320° \rangle$

$\langle 2.3, -1.9 \rangle$

$V_1 + V_2 + V_3 =$

$\langle 4.6, -9.4 \rangle$

$\tan^{-1}\left(-\frac{9.4}{4.6}\right) + 360°$

$\approx 296.1°$

$\sqrt{4.6^2 + 9.4^2}$

≈ 10.5

5.

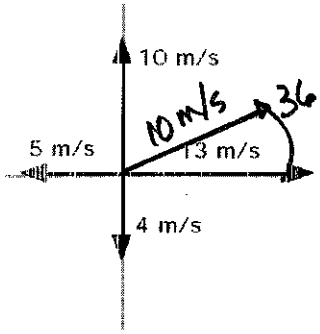

$\langle 13, 0 \rangle$

$\langle 0, 10 \rangle$

$\langle -5, 0 \rangle$

$\langle 0, -4 \rangle$

$\langle 8, 6 \rangle$

$\tan^{-1}\left(\frac{6}{8}\right) \approx 36.9°$

$\sqrt{8^2 + 6^2} = 10$

6.

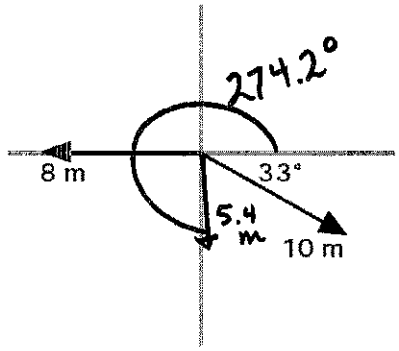

$V_1 = \langle -8, 0 \rangle$

$V_2 = \langle 10\cos 327°, 10\sin 327° \rangle$

$\langle 8.4, -5.4 \rangle$

$V_1 + V_2 = \langle 0.4, -5.4 \rangle$

$\tan^{-1}\left(\frac{-5.4}{0.4}\right) + 360° \approx 274.2°$

$\sqrt{.4^2 + 5.4^2} \approx 5.4$

GSE Precalculus Practice Worksheet Dot Product

1. Compute **u•v**

a. **u** = <2,3> and **v** = <0,5>

$(2\times 0)+(3\times 5)$
$0+15$
15

Slopes

$\frac{3}{2} ? \frac{5}{0}$

CROSS PRODUCTS

$3(0) ? 2(5)$
$0 \neq 10$
∴ not parallel

b. **u** = <3,0> and **v** = <0,-2>

$(3\times 0)+(0\times -2)$
$0+0$
0

c. **u** = <-2,1> and **v** = <2,4>

$(-2\times 2)+(1\times 4)$
$-4+4$
0

d. **u** = 2i – 5j and **v** = -4i + 10j

$(2\times -4)+(-5\times 10)$
$-8+-50$
-58

Slopes

$-\frac{5}{2} ? \frac{10}{-4}$

$(-5)(-4) ? 2(10)$
$20 = 20$ ✓

yes ∴ these are parallel

2. Which of the vectors in #1 are orthogonal? Which of them are parallel?

b + c vectors are orthogonal ; Compare their slopes to see if parallel

Use the vectors **u** = $\mathbf{u} = \langle 1,-2\rangle$, $\mathbf{v} = \langle -9,-1\rangle$ and $\mathbf{w} = \langle 3,4\rangle$ to find the indicated quantity. Show all work.

3. $(\mathbf{u}\bullet\mathbf{v})\mathbf{v}$ <63,7>

$(1\times -9)+(-2\times -1)$
$-9+2$
-7

$-7\langle -9,-1\rangle$

4. $4\mathbf{u}\bullet\mathbf{v}$ -28

$4\langle 1,-2\rangle$
$\langle 4,-8\rangle \cdot \langle -9,-1\rangle$
$(4\times -9)+(-8\times -1)$
$-36+8$

5. $-3\mathbf{w}\bullet\mathbf{v}$ 93

$-3\langle 3,4\rangle$
$\langle -9,-12\rangle \cdot \langle -9,-1\rangle$
$81+12$

6. $(\mathbf{v}\bullet\mathbf{u})-(\mathbf{w}\bullet\mathbf{v})$ 24

$(-9\times 1)+(-1\times -2)$
$-9+2$
-7

$-$

$(3\times -9)+(4\times -1)$
$-27+-4$
-31

7. $-3(\mathbf{w}\bullet\mathbf{v})$ 93

$-3[(3\times -9)+(4\times -1)]$
$-3(-27+-4)$
$-3(-31)$

8. $\mathbf{u}(\mathbf{v}\bullet\mathbf{v})$ <82,-164>

$\langle 1,-2\rangle((-9\times -9)+(-1\times -1))$
$\langle 1,-2\rangle(81+1)$
$\langle 1,-2\rangle 82$

Find the work done using the formula *work* = *force* • *displacement*

displacement

9. A constant force **F** = <2,5> moves an object along the vector <-1,5>. Find the work done during this process.

WORK = $\langle 2,5\rangle \cdot \langle -1,5\rangle$
$(2\times -1)+(5\times 5)$
$-2+25$
23 joules

initial terminal

10. Find the work done by the force **F** = -2i + 3j in moving an object from the point (1,4) to the point (3,-5)

$\langle 3-1, -5-4 \rangle$

$\langle 2, -9 \rangle$

$\langle -2, 3 \rangle \cdot \langle 2, -9 \rangle$

$(-2 \times 2) + (3 \times -9)$

$-4 + -27$

-31

11. A 36 N force acting at 36° moves a box 20 m horizontally. Find the work done.

force = $\langle 36 \cos 36^\circ, 36 \sin 36^\circ \rangle$ displacement = $\langle 20, 0 \rangle$

$\langle 29.1, 21.2 \rangle \cdot \langle 20, 0 \rangle$

$(29.1 \times 20) + (21.2 \times 0)$

$582 + 0$

582

12. Bob is carrying a pack of books from the table to the shelf with a force of 35 pounds at a 28° angle. If the distance from the table to the shelf is 20 feet horizontally. How much work has Bob done when he carries these books?

Force = $\langle 35 \cos 28^\circ, 35 \sin 28^\circ \rangle$ displacement = $\langle 20, 0 \rangle$

$\langle 30.9, 16.4 \rangle \cdot \langle 20, 0 \rangle$

$(30.9 \times 20) + (16.4 \times 0)$

$618 + 0$

618

12. How much work is done by a force **F** = <9,7> in moving an object from (-1, 6) to (2, 9)?

$\langle 2 - -1, 9 - 6 \rangle$

displacement $\langle 3, 3 \rangle$

$\langle 9, 7 \rangle \cdot \langle 3, 3 \rangle$

$(9 \times 3) + (7 \times 3)$

$27 + 21$

48

13. A 50 N force acting at 260° moves an object 14 m at 215°. Find the work done.

force = $\langle 50 \cos 260^\circ, 50 \sin 260^\circ \rangle$

$\langle -8.7, -49.2 \rangle$

displacement = $\langle 14 \cos 215^\circ, 14 \sin 215^\circ \rangle$

$\langle -11.5, -8.0 \rangle$

$(-8.7 \times -11.5) + (-49.2 \times -8.0)$

$100.05 + 393.6$

494.1